未注公差/General tolerances(mm)															
0 ~ 3	>3 ~ 6	>6 ~ 10	>10 ~ 18	>18 ~ 30	>30 ~ 50	>50 ~ 80	>80 ~ 120	>120 ~ 180	>180 ~ 250	>250 ~ 315	>315 ~ 400	>400 ~ 500	>500	0.1/10
±0.12	±0.18	±0.22	±0.26	±0.31	±0.37	±0.57	±0.80	±0.93	±1.05	±1.15	±1.60	±2.20	±2.50	±2°

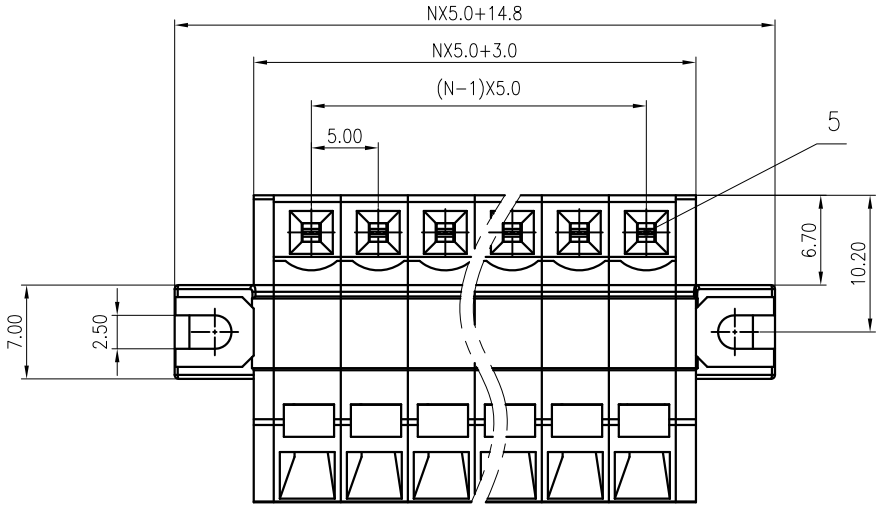

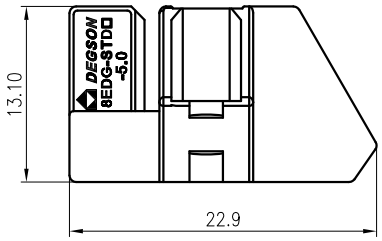

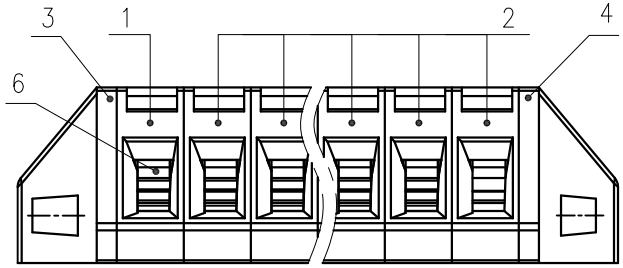

ITEM	NAME OF PART	MATERIAL	NOTES
6	Spring	Stainless steel	/
5	Clamp	Copper alloy	Sn Plated
4	Cover2	PA66	UL94V-0
3	Cover1	PA66	UL94V-0
T2 2	Housing2	PA66	UL94V-0
1	Housing1	PA66	UL94V-0

	B	C	D
UL 标准/UL Standard:			
额定电压/电流/Rated Voltage(V)/Current(A)	300/15	/	/
IEC 标准/IEC Standard:			
过压类别/Overvoltage Category/污染等级/Pollution Degree	III/3	III/2	II/2
额定电压/电流/Rated Voltage(V)/Current(A)	320/20	/	/
额定脉冲电压(KV)/Rate Impulse Voltage(KV)	4	/	/
线径范围(硬线和软线)/Wire Range(rigid and flexible)(mm²/AWG)	0.2~2.5/22~14		
间距/Pitch(mm)/线数范围/Poles	5.0/N=02~24P		
剥线长度/Stripping length(mm)	7-8		
使用温度范围/Operating temperature(℃)	-40~+105		
符合RoHS环保要求/Conform to RoHS	Yes		
标准颜色编号/Standard color number: PANTONE	7534U		

REV	ECN	DESCRIPTION	DRFT	DATE
T2	20-0009	Change drawing	LiY	2019.12.20

MATERIAL: / SURFACE: /

MAT NO.: /

STATUS: /

APPD: LanChH 2020.04.09

CHKD: GongYZh 2020.04.09

DRFT: LiY 2020.01.15

DEGSON® 宁波高松电子有限公司 NINGBO DEGSON ELECTRICAL CO., LTD

NAME: 8EDG-STDM-5.0-XXP-11-01A(H)

DRAWING NO.: 10001828 REV T0

SIZE: A3 mm (inch) TYPE: CUSTOMER DRAWING SCALE: 2.5:1 SHEET 1/1